| RELEASE | REV A | DATE | DFTR | ADM | DWG NO 111055 |
|---|---|---|---|---|---|

| REV | ZONE | REVISION RECORD | DATE | DFTR-ORIG |
|---|---|---|---|---|

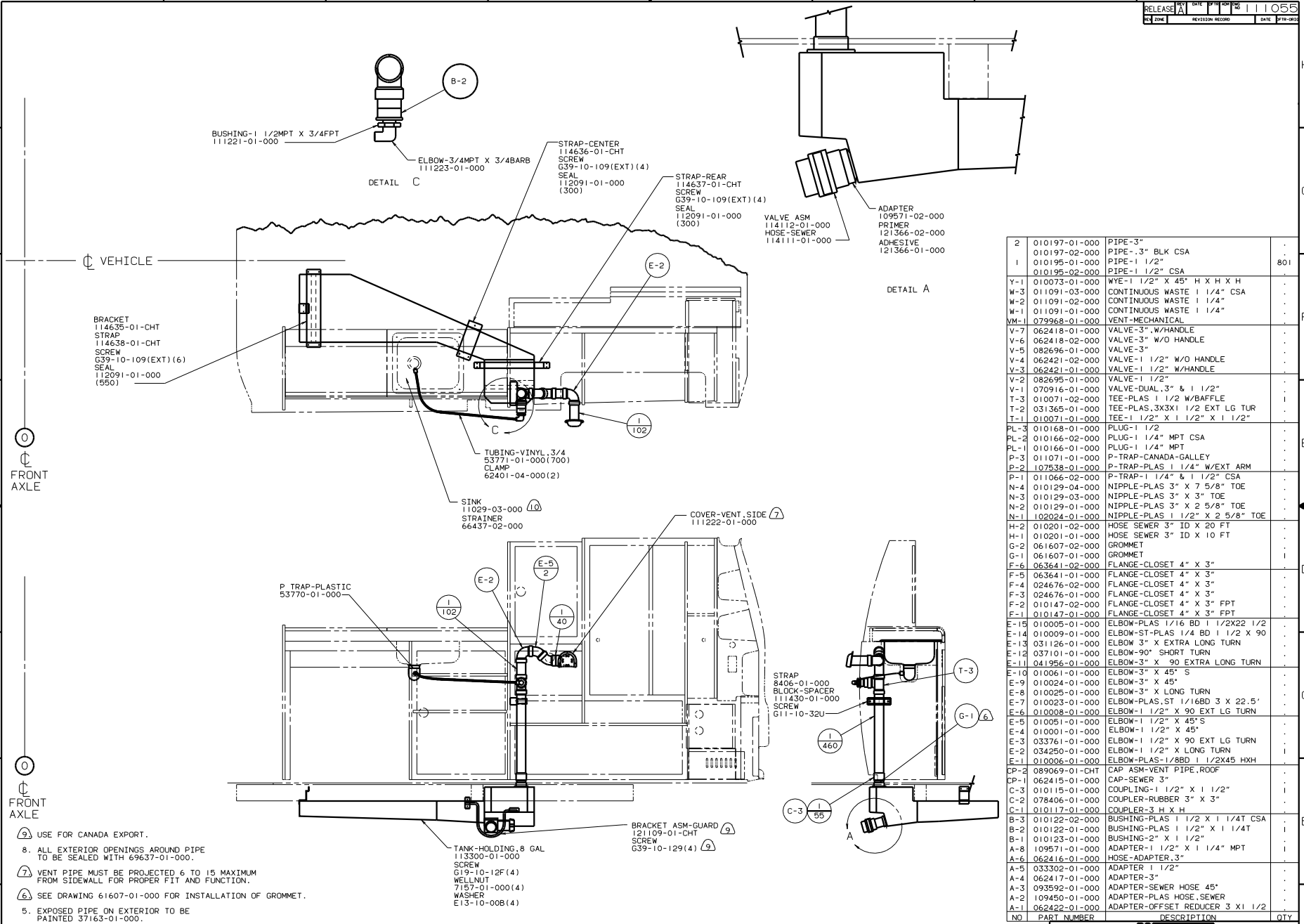


| NO | PART NUMBER | DESCRIPTION | QTY |
|---|---|---|---|
| 2 | 010197-01-000 | PIPE-3" | . |
| | 010197-02-000 | PIPE-.3" BLK CSA | . |
| 1 | 010195-01-000 | PIPE-1 1/2" | 801 |
| | 010195-02-000 | PIPE-1 1/2" CSA | . |
| Y-1 | 010073-01-000 | WYE-1 1/2" X 45° H X H X H | . |
| W-3 | 011091-03-000 | CONTINUOUS WASTE 1 1/4" CSA | . |
| W-2 | 011091-02-000 | CONTINUOUS WASTE 1 1/4" | . |
| W-1 | 011091-01-000 | CONTINUOUS WASTE 1 1/4" | . |
| VM-1 | 079968-01-000 | VENT-MECHANICAL | . |
| V-7 | 062418-01-000 | VALVE-3",W/HANDLE | . |
| V-6 | 062418-02-000 | VALVE-3" W/O HANDLE | . |
| V-5 | 082696-01-000 | VALVE-3" | . |
| V-4 | 062421-02-000 | VALVE-1 1/2" W/O HANDLE | . |
| V-3 | 062421-01-000 | VALVE-1 1/2" W/HANDLE | . |
| V-2 | 082695-01-000 | VALVE-1 1/2" | . |
| V-1 | 070916-01-000 | VALVE-DUAL,3" & 1 1/2" | . |
| T-3 | 010071-02-000 | TEE-PLAS 1 1/2 W/BAFFLE | 1 |
| T-2 | 031365-01-000 | TEE-PLAS,3X3X1 1/2 EXT LG TUR | . |
| T-1 | 010071-01-000 | TEE-1 1/2" X 1 1/2" X 1 1/2" | . |
| PL-3 | 010168-01-000 | PLUG-1 1/2 | . |
| PL-2 | 010166-02-000 | PLUG-1 1/4" MPT CSA | . |
| PL-1 | 010166-01-000 | PLUG-1 1/4" MPT | . |
| P-3 | 011071-01-000 | P-TRAP-CANADA-GALLEY | . |
| P-2 | 107538-01-000 | P-TRAP-PLAS 1 1/4" W/EXT ARM | . |
| P-1 | 011066-02-000 | P-TRAP-1 1/4" & 1 1/2" CSA | . |
| N-4 | 010129-04-000 | NIPPLE-PLAS 3" X 7 5/8" TOE | . |
| N-3 | 010129-03-000 | NIPPLE-PLAS 3" X 3" TOE | . |
| N-2 | 010129-01-000 | NIPPLE-PLAS 3" X 2 5/8" TOE | . |
| N-1 | 102024-01-000 | NIPPLE-PLAS 1 1/2" X 2 5/8" TOE | . |
| H-2 | 010201-02-000 | HOSE SEWER 3" ID X 20 FT | . |
| H-1 | 010201-01-000 | HOSE SEWER 3" ID X 10 FT | . |
| G-2 | 061607-02-000 | GROMMET | . |
| G-1 | 061607-01-000 | GROMMET | 1 |
| F-6 | 063641-02-000 | FLANGE-CLOSET 4" X 3" | . |
| F-5 | 063641-01-000 | FLANGE-CLOSET 4" X 3" | . |
| F-4 | 024676-02-000 | FLANGE-CLOSET 4" X 3" | . |
| F-3 | 024676-01-000 | FLANGE-CLOSET 4" X 3" | . |
| F-2 | 010147-02-000 | FLANGE-CLOSET 4" X 3" FPT | . |
| F-1 | 010147-01-000 | FLANGE-CLOSET 4" X 3" FPT | . |
| E-15 | 010005-01-000 | ELBOW-PLAS 1/16 BD 1 1/2X22 1/2 | . |
| E-14 | 010009-01-000 | ELBOW-ST-PLAS 1/4 BD 1 1/2 X 90 | . |
| E-13 | 031126-01-000 | ELBOW 3" X EXTRA LONG TURN | . |
| E-12 | 037101-01-000 | ELBOW-90° SHORT TURN | . |
| E-11 | 041956-01-000 | ELBOW-3" X 90 EXTRA LONG TURN | . |
| E-10 | 010061-01-000 | ELBOW-3" X 45° S | . |
| E-9 | 010024-01-000 | ELBOW-3" X 45° | . |
| E-8 | 010025-01-000 | ELBOW-3" X LONG TURN | . |
| E-7 | 010023-01-000 | ELBOW-PLAS,ST 1/16BD 3 X 22.5' | . |
| E-6 | 010008-01-000 | ELBOW-1 1/2" X 90 EXT LG TURN | . |
| E-5 | 010051-01-000 | ELBOW-1 1/2" X 45°S | . |
| E-4 | 010001-01-000 | ELBOW-1 1/2" X 45° | . |
| E-3 | 033761-01-000 | ELBOW-1 1/2" X 90 EXT LG TURN | . |
| E-2 | 034250-01-000 | ELBOW-1 1/2" X LONG TURN | 1 |
| E-1 | 010006-01-000 | ELBOW-PLAS-1/8BD 1 1/2X45 HXH | . |
| CP-2 | 089069-01-CHT | CAP ASM-VENT PIPE,ROOF | . |
| CP-1 | 062415-01-000 | CAP-SEWER 3" | . |
| C-3 | 010115-01-000 | COUPLING-1 1/2" X 1 1/2" | 1 |
| C-2 | 078406-01-000 | COUPLER-RUBBER 3" X 3" | . |
| C-1 | 010117-01-000 | COUPLER-3 H X H | . |
| B-3 | 010122-02-000 | BUSHING-PLAS 1 1/2 X 1 1/4T CSA | . |
| B-2 | 010122-01-000 | BUSHING-PLAS 1 1/2" X 1 1/4T | 1 |
| B-1 | 010123-01-000 | BUSHING-2" X 1 1/2" | . |
| A-8 | 109571-01-000 | ADAPTER-1 1/2" X 1 1/4" MPT | 1 |
| A-6 | 062416-01-000 | HOSE-ADAPTER,3" | . |
| A-5 | 033302-01-000 | ADAPTER 1 1/2" | . |
| A-4 | 062417-01-000 | ADAPTER-3" | . |
| A-3 | 093592-01-000 | ADAPTER-SEWER HOSE 45° | . |
| A-2 | 109450-01-000 | ADAPTER-PLAS HOSE,SEWER | . |
| A-1 | 062422-01-000 | ADAPTER-OFFSET REDUCER 3 X1 1/2 | . |

NOTES:

1. SLOPE OF HORIZONTAL PIPING TO BE 6 PER 300 MINIMUM.
2. SLOPE OF TRAP MUST BE 6 PER 300 MINIMUM.
3. ALL PIPE AND FITTINGS TO BE ASSEMBLED WITH SOLVENT 4020-01-000.
4. FOR CANADIAN UNITS EACH HOLDING TANK SHALL HAVE A CSA APPROVAL STAMPED NEAR IAPMO APPROVAL.
5. EXPOSED PIPE ON EXTERIOR TO BE PAINTED 37163-01-000.
6. SEE DRAWING 61607-01-000 FOR INSTALLATION OF GROMMET.
7. VENT PIPE MUST BE PROJECTED 6 TO 15 MAXIMUM FROM SIDEWALL FOR PROPER FIT AND FUNCTION.
8. ALL EXTERIOR OPENINGS AROUND PIPE TO BE SEALED WITH 69637-01-000.
9. USE FOR CANADA EXPORT.
10. FASTENER CLAMPS AND SCREWS SUPPLIED WITH SINK.

WINNEBAGO 94 V117RC

| DFTR | DATE | UNSPECIFIED TOLERANCES ARE: | MATERIAL: |
|---|---|---|---|
| CHKR | DATE | WHOLE DIM (X) ± | |
| P E | DATE | ONE-PLACE (X.X) ± | |
| M E | DATE | TWO-PLACE (X.XX) ± | |
| DSNR | DATE | ANGLE ± | |
| | | THIRD ANGLE PROJECTION | |

LAYOUT NO: WVVAN3 TITLE: DRAINAGE SYSTEM INSTL

DIA Ø SCALE: 0.250 DO NOT SCALE DRAWING SIZE D DWG NO 111055

ALL DIMENSIONS ARE IN MILLIMETERS SHEET OF

Copyright 2005 Winnebago Industries, Inc.

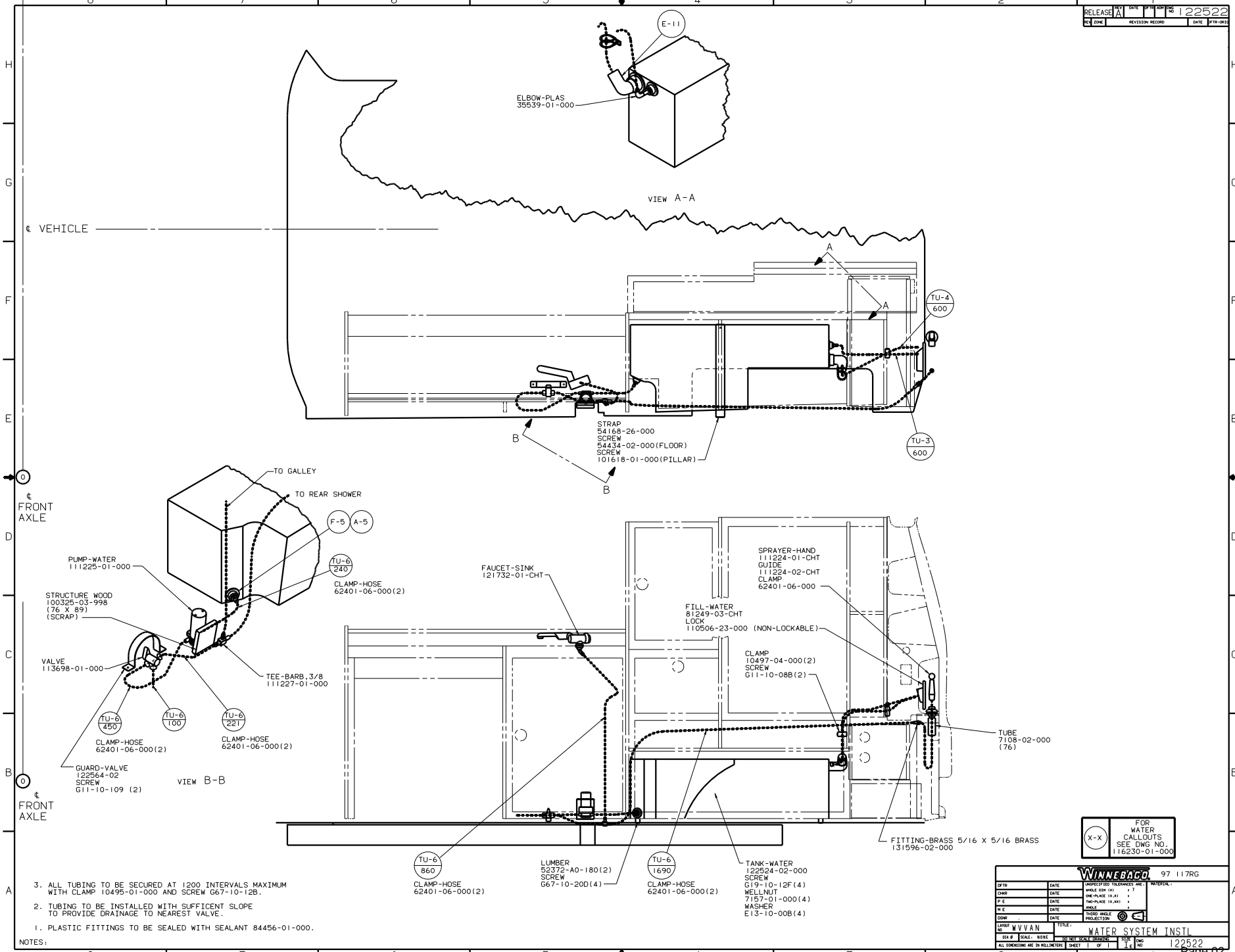


3. ALL TUBING TO BE SECURED AT 1200 INTERVALS MAXIMUM WITH CLAMP 10495-01-000 AND SCREW G67-10-12B.

2. TUBING TO BE INSTALLED WITH SUFFICENT SLOPE TO PROVIDE DRAINAGE TO NEAREST VALVE.

1. PLASTIC FITTINGS TO BE SEALED WITH SEALANT 84456-01-000.

NOTES:

Copyright 2005 Winnebago Industries, Inc.